Circuit

Schematic diagram with RPi GPIO Extension Shield

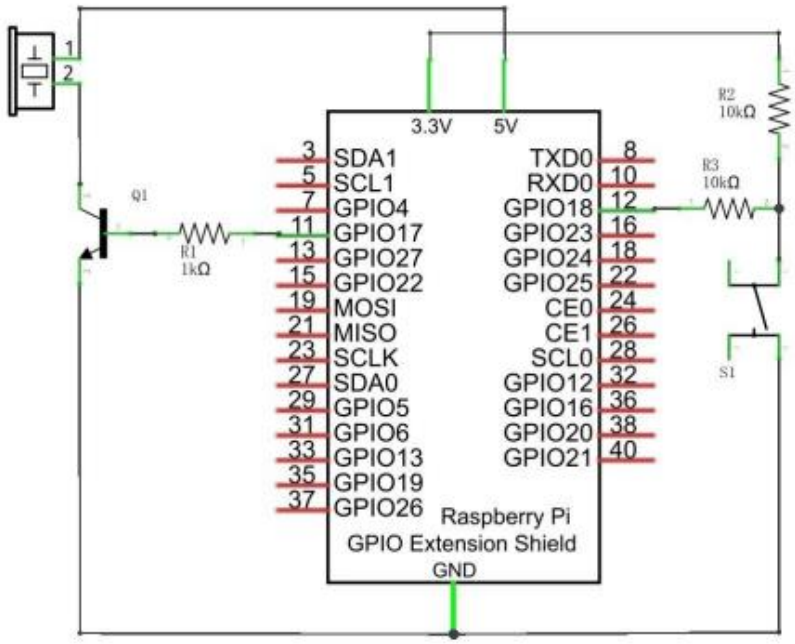

Hardware connection. If you need any support, please feel free to contact us via: support@freenove.com

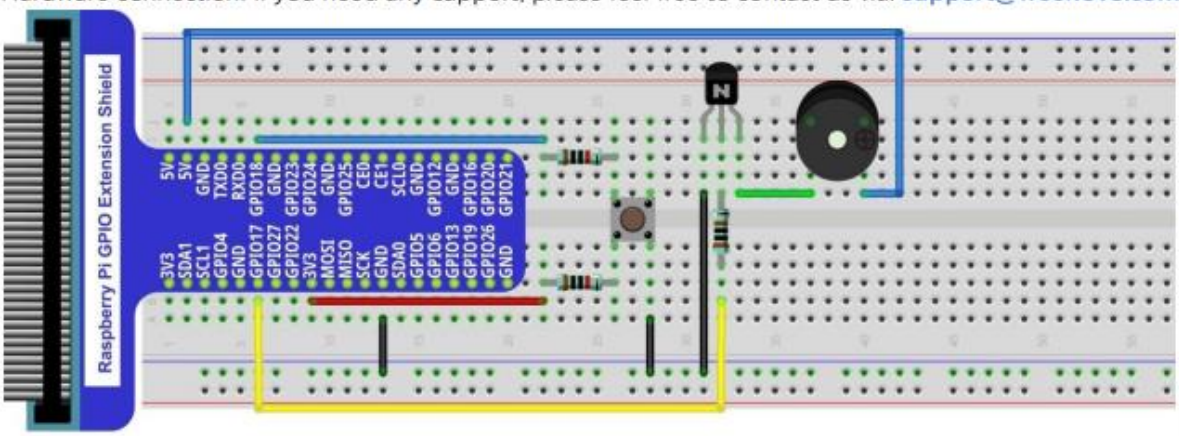

Video: https://youtu.be/R_dmi3YwY-U

The following is the program code:

```
import RPi.GPIO as GPIO

buzzerPin = 11    # define buzzerPin
buttonPin = 12    # define buttonPin

def setup():
    GPIO.setmode(GPIO.BOARD)        # use PHYSICAL GPIO Numbering
    GPIO.setup(buzzerPin, GPIO.OUT)   # set buzzerPin to OUTPUT mode
    GPIO.setup(buttonPin, GPIO.IN, pull_up_down=GPIO.PUD_UP)    # set buttonPin to PULL UP
INPUT mode

def loop():
    while True:
        if GPIO.input(buttonPin)==GPIO.LOW: # if button is pressed
            GPIO.output(buzzerPin,GPIO.HIGH) # turn on buzzer
            print ('buzzer turned on >>>')
        else : # if button is relessed
            GPIO.output(buzzerPin,GPIO.LOW) # turn off buzzer
            print ('buzzer turned off <<<')

def destroy():
    GPIO.cleanup()                     # Release all GPIO

if __name__ == '__main__':     # Program entrance
    print ('Program is starting...')
    setup()
    try:
        loop()
    except KeyboardInterrupt:  # Press ctrl-c to end the program.
        destroy()
```